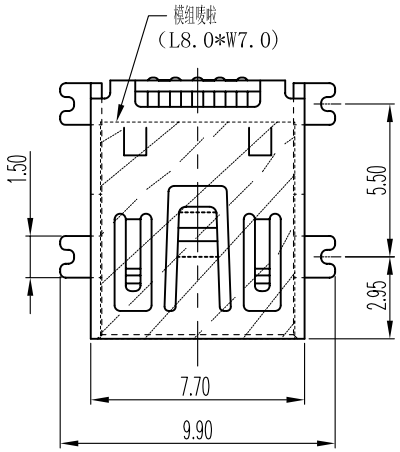

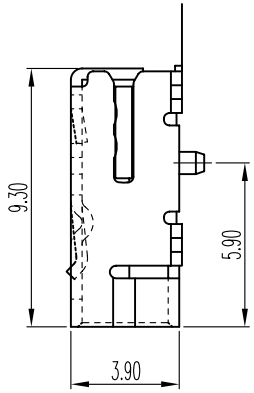

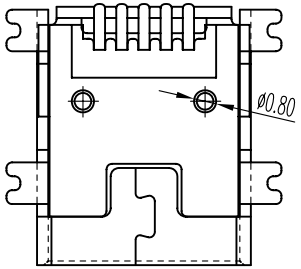

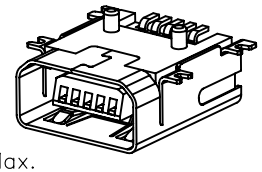

Specifications:
Current Rating:1.0A AC/DC
Voltage Rating:30V AC/DC
Contact Resistance:20m ohm. Max.
Insulation Resistance:1,000M ohm. min.
Withstanding Voltage:750V AC For One Minute
Operating Temperature Range:−40°C ~ +105°C
Material and Finish
Insulator:High Temp. plastic(LCP UL94V−0)
Insulator Color:Black
Contact:Phosphor Bronze
Plating:Gold Plated on Contact Area,
Tin Plated on Solder Tail.
Shell:Brass,Tin Plated
Package:1000pcs/Reel
How To Order
MBABMRSM−05−CR

- CR — Capton+Tape&Reel
- 05 — No. Of Positions
- SM — SMD Type
- MBAB — Mini AB Type

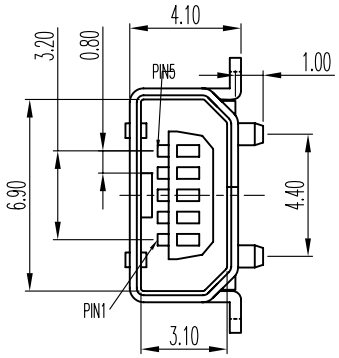

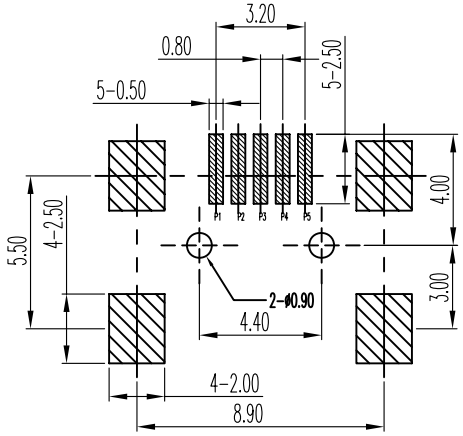

RECOMMENDED PCB LAYOUT(TOP VIEW)
GENERAL TOLERANCES:±0.05

RoHS Compliant

REV	DATE	FILE	BY
F			
E			
D			
C			
B			
A	27−Nov−2014	(PUR160)	Mary

DRAWN: Mary
CHECKED: Jeremy Liu
APPROVAL: Mike Wu

GENERAL TOLERANCE:
.X=±0.20
.XX=±0.15

UNIT: MM
SCALE:1:1
SHEET: 1 / 1
PROJECTION:

HOYATO Connector supplies

DESCRIPTION: Mini USB 5P Socket AB Type

PART NO: MBABMRSM−05−CR

SIZE A4